Demolition Permit Application

Building Commissioner Office 139 S. Kirkwood Rd.
Kirkwood, MO 63122 (314) 822-5823 Fax (314) 822-5898

WHERE COMMUNITY AND SPIRIT MEET®

Permit #_____ Zoning District_____ (Date Stamp)

Property Address:_____

Is the Property a Kirkwood Landmark or in a Kirkwood Historic District? YES NO

If yes, demolition plans must be submitted to Landmarks Commission, (Kirkwood Code of Ordinance 12 ½ - 12(c))

Property Owner Information	**Contractor**
Name:_____	Name: _____
Address:_____	Address: _____
City/State/Zip:_____	City/State/Zip: _____
Phone:_____	Phone: _____ License#_____
E-mail:_____	E-mail: _____

Permit Fees and Deposits

Single Family Permit….$120, Single Family Deposit Amount…$2000, Single Family Deposit Fee….$100

All Others (multi-family/commercial)..$240

- If work does not begin within 30 days and completed within 60 days of issuance date, the permit shall become null and void.

FOR SINGLE FAMILY ONLY:

- Failure to obtain a building permit, or complete the demolition and restore the site including grading, seeding/strawing and/or sodding and abate any code violations thereon within 60 days shall result in the deposit being forfeited to the City of Kirkwood.
- The City, after receiving a written request from the applicant or Contractor, may at its sole discretion extend the permit for one or more additional thirty (30) day period if warranted by conditions such as weather.
- The forfeiting of the deposit does not relieve the applicant from completing all work.
- The City assumes no responsibility to complete such improvements; however, if the City performs the site restoration, the cost to perform such work plus a $500 administrative fee shall be deducted from the deposit.
- Within 60 days of issuance of the demolition permit the applicant or contractor shall make a written request to the City for return of the deposit after the foundation has been approved on the new house being built or ground cover has been established. For information call 822-5822.
- Deposit is not required for demolitions in an approved subdivision or project that has been reviewed by Planning and Zoning Commission and there is a valid performance guarantee on file with the City for the subdivision.

I have read and understand the ordinances of the City of Kirkwood pertaining to demolition permits and the proposed work and hereby agree to comply with all provisions of the ordinances of the City of Kirkwood. I hereby certify that structure is located on property which I have the legal right to clear with full permission and understanding of the owner. The site clearance will be performed in accordance with the information on this permit application and all city codes; and further I recognize the City's authority to enter the site and perform site restoration and abate code violations if I fail to perform in accordance with city codes and this application.

Owners/Applicant Signature: _____ Date:_____

Site Approved by: _____ **Date:** _____ **Issue Approved by:** _____ **Date:**_____

Deposit Paid by:_____ Logged on chart □ Scanned & E-mailed □

Boundary survey approved_____ Deposit release approved by_____ Request sent to finance on _____

Refund check#_____ Mailed on _____ or Called to pick-up on _____

Demolition Check List – City Use Only

____ Application for demolition

____ Landmarks Commission approval (if applicable)

____ Site plan – including the following:

- □ Indicate the structure(s) to be removed
- □ Indicate existing grade contours of lot
- □ Indicate location of siltation control devices throughout the property
- □ Indicate location of portable restroom with screening and material storage area

____ Tree survey performed by arborist

____ Disconnects – including the following:

- □ Ameren UE (342-1000)/Kirkwood Electrical (822-5842) disconnect
- □ Missouri American (991-3404)/Kirkwood Water (984-5936) disconnect
- □ Spire Gas (658-5441) disconnect
- □ AT&T telephone disconnect (if applicable)

____ Copy of the Waste Disposal Permit/(Asbestos Audit) St. Louis County (615-8924)

____ Sewer – shall be one of the following (check one)

- □ Destroy lateral and cap/seal at the main
- □ Replace lateral with minimum schedule 40 or greater from main back to property line
- □ Install liner in lateral to main with approval of Public Works Department prior to work start

____ Site condition inspection and approvals {siltation control, tree protection, signage, portable restroom, material storage with hard surface or rock base, and rock base for parking (if needed)}

Once all of the above items have been completed/approved, the demolition permit shall then be issued by the Building Commissioner Office upon submission of the following fees:

____ Permit (single family $120 or all others $240)

____ Deposit amount ($2000)- Single Family Residence Deposit fee ($100)

Demolition Check List

____ Application for demolition

____ Landmarks Commission approval (if applicable)

____ Site plan – including the following:

- □ Indicate the structure(s) to be removed
- □ Indicate existing grade contours of lot
- □ Indicate location of siltation control devices throughout the property
- □ Indicate location of portable restroom with screening and material storage area

____ Tree survey performed by arborist

____ Disconnects – including the following:

- □ Ameren UE (342-1000)/Kirkwood Electrical (822-5842) disconnect
- □ Missouri American (991-3404)/Kirkwood Water (984-5936) disconnect
- □ Spire Gas (658-5441) disconnect
- □ AT&T telephone disconnect (if applicable)

____ Copy of the Waste Disposal Permit/(Asbestos Audit-if applicable) from St. Louis County (615-8924)

____ Sewer – shall be one of the following (check one)

- □ Destroy lateral and cap/seal at the main
- □ Replace lateral with minimum schedule 40 or greater from main back to property line
- □ Install liner in lateral to main with approval of Public Works Department prior to work start

____ Site condition inspection and approvals {siltation control, tree protection, signage, portable restroom, material storage with hard surface or rock base, and rock base for parking (if needed)}

Once all of the above items have been completed/approved, the demolition permit shall then be issued by the Building Commissioner Office upon submission of the following fees:

____ Permit fee (single family $120 or all others $240)

____ Deposit amount ($2000)

____ Deposit fee ($100)

- If the lot is not going to be built on within 60 days following demolition, the lot shall be final graded, seeded and strawed-lawn to be established. Driveway apron removed and curb installed (if applicable). See conditions of single-family demolition deposit.
- A new sewer lateral shall be required for all new construction.
- New single-family residential building permits require a site plan review. Contact Jonathan Raiche, Zoning 984-5926.
- To verify that the utility disconnects have been received or to schedule the inspections, please call the Building Department at 822-5823 or 984-6943.
- A site inspection is required prior to issuance of the permit. Call the Building Department at 822-5823 or 984-6943 for inspections. There will be an additional fee of $40 for additional inspections if the site is not ready for inspection.

This is general information for the public. The applicant is fully responsible for compliance with all City codes and regulations. In all cases, the City Code shall apply to any work within the City of Kirkwood.

139 S. Kirkwood Rd. Kirkwood, MO 63122 (314) 822-5823 Fax (314) 822-5898

Additional Requirements for Site

1. A temporary construction fence (minimum 3 foot high mesh type or better, with supports placed at 8 foot intervals) shall be erected at all excavation areas within the site as approved by the City of Kirkwood. A neutral color material is preferred.
2. All soil erosion protection (silt fencing) and tree protection (fencing and signage) as required, shall be inspected and maintained on a regular basis. Due diligence and pre-site work shall be used to prevent any dirt, mud, or debris from being carried out onto the road ways from the property. The premittee is responsible for all sub-contractors and delivery vehicles.
3. Portable restroom shall be placed within the lot area (a minimum of 15 feet back from the front property line and a minimum of 5 feet from the side or rear property line) which is least invasive to the surrounding residents and as approved by the City of Kirkwood. The restroom shall be surrounded by a 6 foot high privacy/decorative fence-type enclosure.
4. Parking on the grass, dirt or unimproved area is not allowed. If parking of vehicles is desired on the site, a temporary rocked area shall be provided and removed in its entirety at the site grading stage.
5. The exterior construction, demolition, alteration, or repair of buildings involving the operation of machinery or equipment which causes loud or disturbing noise is allowed between the hours of 7:00 a.m. and 8:00 p.m. Monday through Saturday and between 9:00 a.m. and 8:00 p.m. on Sunday.

FOR SINGLE FAMILY ONLY:

- Failure to obtain a building permit, or complete the demolition and restore the site including grading, seeding/strawing and/or sodding and abate any code violations thereon within 60 days shall result in the deposit being forfeited to the City of Kirkwood.
- The City, after receiving a written request from the applicant or Contractor, may at its sole discretion extend the permit for one or more additional thirty (30) day period if warranted by conditions such as weather.
- The forfeiting of the deposit does not relieve the applicant from completing all work.
- The City assumes no responsibility to complete such improvements; however, if the City performs the site restoration, the cost to perform such work plus a $500 administrative fee shall be deducted from the deposit.
- Within 60 days of issuance of the demolition permit the applicant or contractor shall make a written request to the City for return of the deposit after the foundation has been approved on the new house being built or ground cover has been established. For information call 822-5822.
- Deposit is not required for demolitions in an approved subdivision or project that has been reviewed by Planning and Zoning Commission and there is a valid performance guarantee on file with the City for the subdivision.

139 S. Kirkwood Rd. Kirkwood, MO 63122 (314) 822-5823 Fax (314) 822-5898

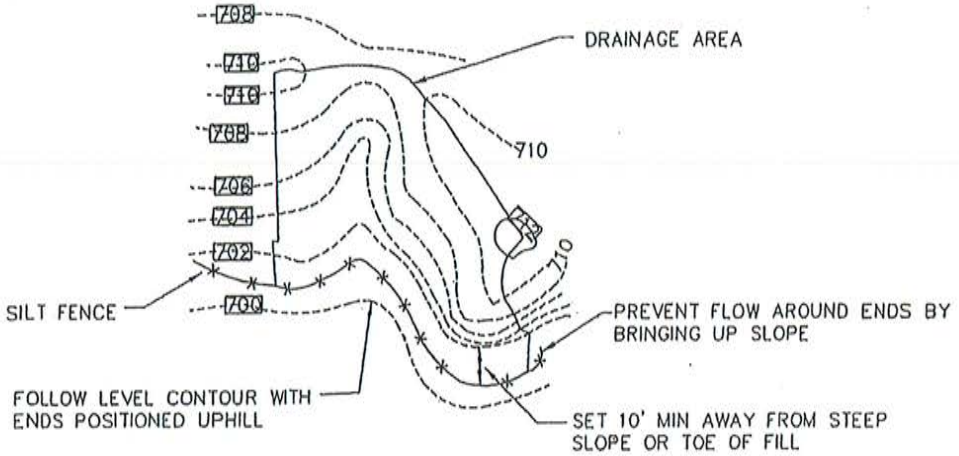

PLAN VIEW

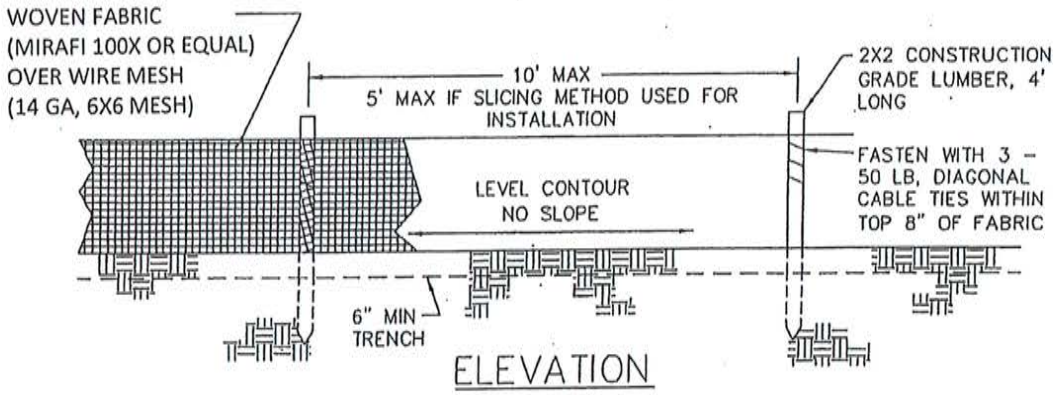

ELEVATION

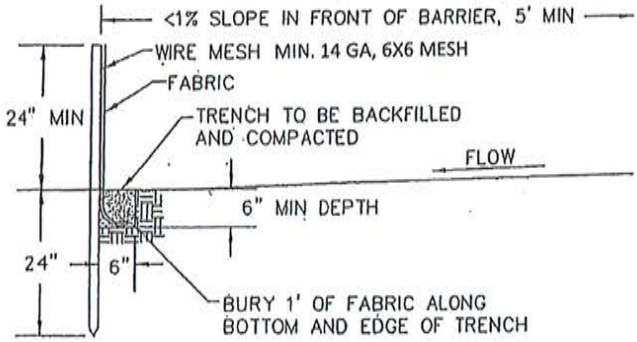

SECTION

NOTE: IF FABRIC IS INSTALLED BY EQUIPMENT DESIGNED TO SLICE INTO THE GROUND, THE TRENCH IS NOT NEEDED

WRAP GEOTEXTILE AROUND STAKES BEFORE DRIVING

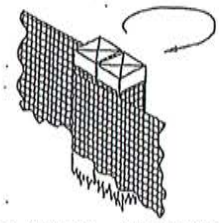

JOINING SECTIONS OF SILT FENCE

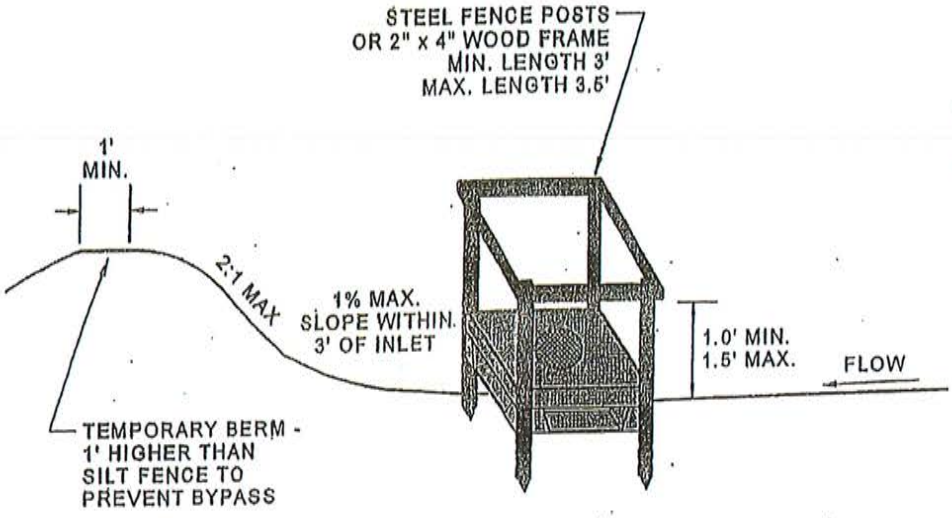

PERSPECTIVE

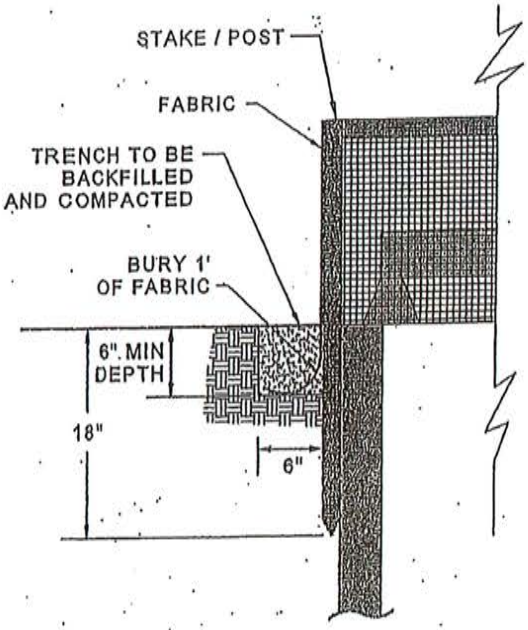

ELEVATION

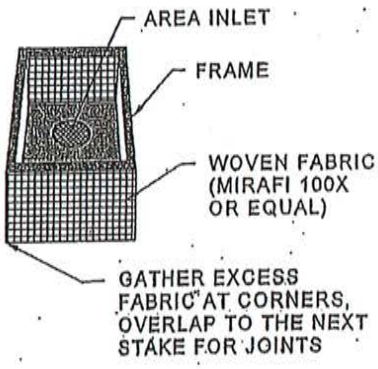

FABRIC

SAINT LOUIS COUNTY
DEPARTMENT OF HIGHWAYS AND TRAFFIC
CLAYTON, MISSOURI

TYPICAL BMP DETAIL

INLET PROTECTION - FABRIC DROP

REVISION DATE: January 15, 2004

CLOSING PUBLIC SIDEWALKS

In accordance with the following Section of the General Code of Ordinances:

> Sect. 20-27. Closing of public sidewalks for construction of infill.
>
> Existing sidewalks along the public right-of-way shall be maintained throughout the demolition and construction process of single-family infill residences and remain open for public use at all times except for temporary reconstruction of utilities, driveways, and sidewalks not exceeding 72 hours except with appropriate permits and authorization of the Public Works Director, Police Chief, or their authorized representative.

However, if authorization is given to close a sidewalk, the following requirements of the Missouri on Uniform Traffic Control Devices for Streets and Highways.

Section 6F.13 SIDEWALK CLOSED Signs (R9-9, R9-10, R9-11, R9-11a)

R9-9

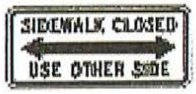

R9-10

R9-11

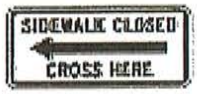

R9-11a

SIDEWALK CLOSED signs (R9-9) should be used where pedestrian flow is restricted. Signs should be installed at the beginning of the closed sidewalk, at the intersections preceding the closed sidewalk, and elsewhere along the closed sidewalk as needed. Bicycle/Pedestrian Detour (M4-9a) signs or Pedestrian Detour (M4-9b) signs should be used where pedestrian flow is rerouted (See MUTCD Section 6F.53).

SIDEWALK CLOSED (ARROW) USE OTHER SIDE (R9-10) sign should be installed at the beginning of the restricted sidewalk when a parallel sidewalk exists on the other side of the roadway.

SIDEWALK CLOSED AHEAD (ARROW) CROSS HERE (R9-11) signs should be used to indicate to pedestrians that sidewalks beyond the sign are closed and to direct them to open crosswalks, sidewalks, or other travel paths.

SIDEWALK CLOSED (ARROW) CROSS HERE (R9-11a) signs should be installed just beyond the point to which pedestrians are being redirected.

These signs are typically mounted on a detectable barricade to encourage compliance and to communicate with pedestrians that the sidewalk is closed. Printed signs are not useful to many pedestrians with visual disabilities. A barrier or barricade detectable by a person with a visual disability is sufficient to indicate that a sidewalk is closed. If the barrier is continuous with detectable channelizing devices for an alternate route, accessible signage might not be necessary. An audible information device is needed when the detectable barricade or barrier for an alternate channelized route is not continuous.

Tree Protection Plan Requirements

(For questions or more detail please refer to the Tree Ordinance and Tree Manual. These can be found at http://www.kirkwoodmo.org/content/2208/urban-forestry-commission.aspx)

- Tree Protection Plan
  - Tree Study (See Tree Manual for more details)
  - Canopy Coverage Requirements
    - All Single family lots shall have minimum tree canopy coverage of 350 square feet per 1000 square feet of lot coverage (35% coverage)
    - A canopy coverage map shall be provided showing the following:
      - Current Canopy coverage (this can be done with an aerial photo and a simple polygon)
      - Proposed Site Plan (building location, driveway, utilities, etc..)
      - Proposed canopy coverage post site disturbance; including all trees that are to be planted to reach minimum coverage requirements
      - Trees are to be marked and numbered
      - Species of tree
      - Numerical indicators

    All trees to be protected or included in the canopy requirements shall be of an approved species listed in the Tree Manual. Existing Trees shall be live, healthy trees over 8 inches in diameter and in good or fair condition of health.

- If you have a tree located in the City Right of Way you MUST have approval from the City prior to any maintenance of this tree. This includes removal or pruning. Tree Protection must be set up around all City right of Way trees.

TREE PROTECTION SPECIFICATIONS
For additional information please contact Urban Forester, Cory Meyer at 984-5907

General – Tree protection has three primary functions: (1) to keep the foliage canopy and branching structure clear from contact by equipment, materials, and activities; (2) to preserve roots and soil conditions in an intact and non-compacted state; and (3) to identify the Tree Protection Zone (TPZ) in which no soil disturbance is permitted and activities are restricted.

Trees to be Protected – All public trees on City right-of-way and all trees designated to be saved in tree study for site.

Materials

a. The Tree Protection Zone (TPZ) is a restricted area around the base of the tree at the drip line with a minimum radius of ten (10) feet or as shown in the Tree Study, whichever is greater, enclosed by fencing. **No work, storage, or equipment operation shall be performed in this area.**

b. Tree Protection: The fence shall enclose the entire area of the TPZ of the tree(s) to be protected throughout the life of the construction project. In some parking areas, if fencing is located on paving or concrete that will not be demolished, then the posts may be supported by an appropriate grade level concrete base, if approved. For trees situated within a planting strip or near a sidewalk or driveway, only the planting strip and yard side of the TPZ shall be enclosed with the required protective fencing in order to keep the sidewalk and street open for public use.

c. Size, type, and area to be fenced: All trees to be preserved shall be protected with three (3) foot high green mesh fencing. Fencing is to be mounted on five (5) feet heavy duty steel green painted T-post driven into the ground to a depth of at least one (1) foot, six (6) inches (18" minimum) and no more than eight (8) foot spacing.

d. Warning Sign: A warning sign shall be weatherproof (no holes through the paper signage) and prominently displayed on each fence at 20-foot intervals on the tree protection fencing. The sign shall be a minimum 8.5 inches by 11 inches and clearly state: "WARNING – Tree Protection Zone". See exhibit A-S.

e. Duration. Tree fencing shall be erected before demolition or construction begins and shall remain in place until final inspection of the project, except for work specifically allowed in the TPZ.

f. During Demolitions or Construction.

1. All neighbors' trees that overhang the project site or are within **ten** feet of the property line shall be protected from impact and protection fencing shall be required.
2. The damage, removal, or failure to protect the trees designated to be preserved shall result in a violation of the Code of Ordinances.
3. The applicant shall be responsible for the repair or replacement of any publicly-owned trees that are damaged during the course of construction.
4. The following tree preservation measures apply to all trees to be saved:
   (a) No storage of material, topsoil, vehicles, or equipment shall be permitted within the TPZ.
   (b) The ground under and around the tree canopy area shall not be altered
   (c) Trees to be retained shall be irrigated, aerated, and maintained as necessary to ensure survival.

EXHIBIT A

TREE PROTECTION FENCING

Revised October 2014

NOTE: 8.5" x 11" Warning signs are required on fenceing a minimum of 20' intervals, with a minimum of one sign on each elevation of fence. Sign shall be moisture protected as in Exhibit A-S.

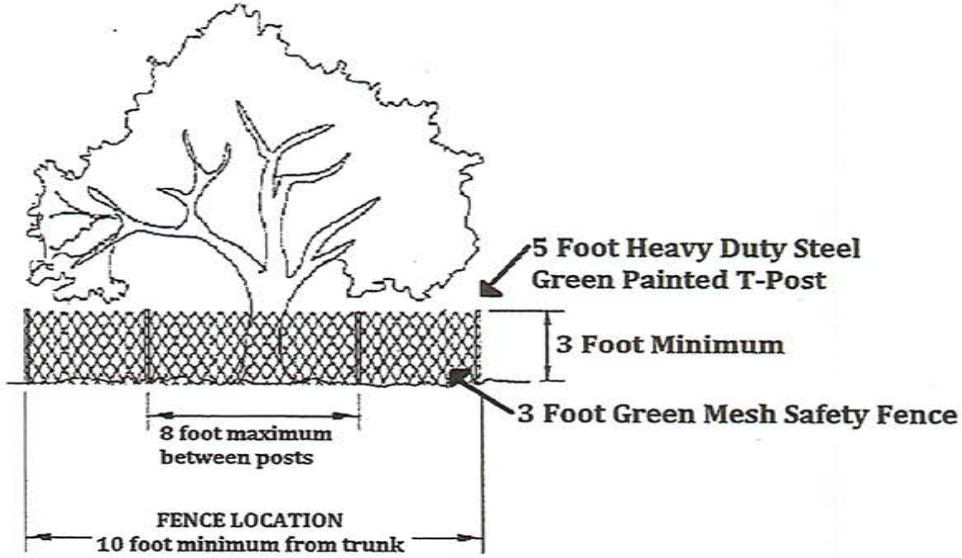

Distance from trunk shall be as shown in tree study or 10' minimum.

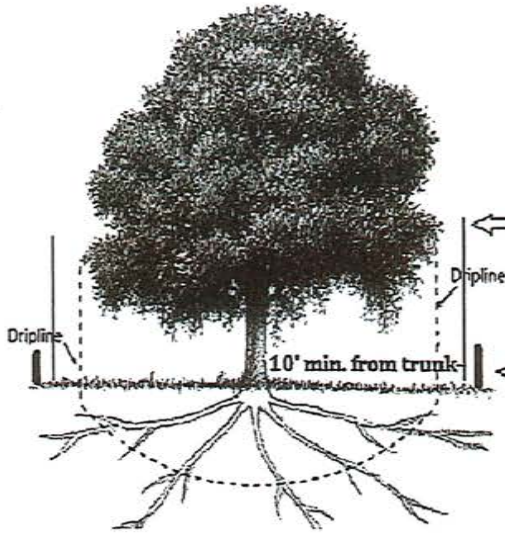

Tree Protection Fencing around entire tree, with 5' heavy duty steel (green painted) T-post at 8' spacing minimum

Critical Root Zone

TREE STUDY-SITE PLAN REVIEW

PROPERTY LOCATION: _____

***TREE/LANDSCAPE LOCATIONS SHALL BE INDICATED ON SITE SURVEY (SCALED) AND ATTACHED TO THIS STUDY SHEET**

List all significant trees (live, healthy trees, of a species suitable for the urban environment having a diameter of eight inches or greater) on premises, on abutting public rights-of-way, and on private property within **ten** feet of all property lines.

KEY TO DRAWING	TREE SPECIES	DIAMETER	SAVE YES/NO IF NO, EXPLAIN IN NOTES	PROTECTION METHODS EXPLAIN IN NOTES, PROVIDE DRAWINGS	DOLLAR VALUE FROM GUIDE FOR TREE APPRAISAL	NOTES
A						
B						
C						
D						
E						
F						
G						
H						
I						
J						

****NOTE: Public trees abutting the site shall not be removed and require tree protection fencing.****

I hereby certify that I have viewed the premises and provide this professional opinion regarding the survivability of significant trees on the site and abutting the site and the appropriateness of proposed tree replacement and landscaping. Attached is a landscape plan prepared by me or under my direction.

_____

Name/Signature/Certification/Date

** Copy this form as needed for additional trees.

Revised 2019 tp Y: Demo Permit Information 2019

CITY OF KIRKWOOD
PUBLIC WORKS DEPARTMENT
March 18, 2018

COMPANY NAME	INDIVIDUAL'S NAME	COMPANY ADDRESS	PHONE NUMBER	E-MAIL ADDRESS
Allen's Tree Service	John Beckman	2755 West Pearce Blvd, Wentzville, MO 63385	(636) 332-5535	johnb.allenstree@gmail.com
Davey Tree Expert Co.	Tom Beshoar	1206 Hanley Industrial Ct, Brentwood 63144	(314) 961-5440	tom.beshoar@davey.com
Droege Tree Care, Inc.	Colleen Baum	6770 Olive Blvd., St. Louis, MO 63130	(314) 863-1903	colleen@droegetreecare.com
Hansen's Tree Service	Skip Kincaid	104 Hansen Court, O'Fallon, MO 63366	(636)379-1830	skip@hansenstree.com
Trees, Forests, & Landscapes	Michael A Sestric	540 Clark Avenue, Kirkwood, MO 63122	(314) 821-6956	treesforests@sbcglobal.net
	Michael Garrett			

The above indivuals have expressed an interest to perform tree studies in accordance with the codes of the City of Kirkwood.
This list is not exclusive. Any arborist certified by the International Society of Arboriculture and qualified to perform tree studies may be utilized.
The City of Kirkwood has no obligation or responsibility for the performance of the arborist. This list is furnished only to assist in the retaining of an arborist interested in performing tree studies. Certified Arborists who have an interest in tree studies may contact the City of Kirkwood Urban Forester at 314-984-5907 to be included on the above list.

Laminated Tab 2" Min. ← Holes →

Paper laminated signage – No Holes

WARNING

2 ½" Min.

TREE PROTECTION ZONE

1 " Min.

SAMPLE ONLY – RED LETTERING REQUIRED

EXHIBIT A-S

Revised October 2013 tp Y: Demo Permit Information-2013

I WANT TO REMOVE A PUBLIC TREE AS PART OF MY DEVELOPMENT PLAN

- Removal of a tree from the City's Right of Way (ROW) requires a permit to filed with the City Forester and approval.
    - If the Permit is denied the Removal request will be sent to the Kirkwood urban Forestry Council for approval.
    - The Commission meets on the **fourth Tuesday** of the month at 7:00pm. The agenda is prepared no later than the prior Thursday. All requests sent to the Commission must have a Permit submitted to the Urban Forester no later than the 3rd Monday of the month.
- Submittal information:
    - A Tree Survey and/or preliminary site plan
    - A written statement expressing the reason why the tree(s) must be removed. Trees are important City assets and provide many advantages to the public.
- Trees shall be protected during all phases of development, until the Permit or Request to remove has been approved.
    - All damage, destruction, or failure to protect the trees will be considered a violation of the City Code of Ordinances.
- Replacement trees planted in the ROW shall conform to the Tree Manual found on the City's website, or be an approved species by the Urban Forester.

Forestry Permit Application

City Forester Office 139 S. Kirkwood Rd.
Kirkwood, MO 63122 (314) 984-5907 Fax (314) 822-5898

Where Community and Spirit Meet

Permit #_____ (Date Stamp)

Property Address:_____

Property Owner Information	Contractor to Perform Work
Name:_____	Name: _____
Address:_____	Address: _____
City/State/Zip:_____	City/State/Zip: _____
Phone:_____	Phone: _____ License#_____
	E-mail: _____

Permit Fees

Right of Way Forestry Permit Application: $48.00 Amending Permits: $30.00

Tree Species:_____ Number of trees_____

Tree(s) Size (DBH):_____ Certified Arborist Number: _____

- If work does not begin within 30 days and completed within 60 days of issuance date, the permit shall become null and void.
- Changes, corrections, or additions to this permit must be completed with approval within 48 hours of the start of work, or immediately if work changes occur after work has begun.
- The City, after receiving a written request from the applicant or Contractor, may at its sole discretion extend the permit for one or more additional thirty (30) day period if warranted by conditions such as weather.
- The City assumes no responsibility to complete work once a permit is issued; however, if the Contractor fails to complete the maintenance as approved; the City will complete the work, the cost to perform such work plus a $500 administrative fee shall be billed to the Owner/Applicant.
- The Removal of a Public Tree must include the removal of the stump with fillings removed and the hole backfilled with topsoi
- The City assumes no responsibility to plant or care in regards of mulch, watering, or fertilizing once a permit is issued.
- Any person performing work under this permit shall have in their possession and produce upon request, all licenses and permit to operate within the City.
- Any person obtaining this permit assumes all liability and risk related to or arising out of any work performed or completed under the use of this permit.

I have read and understand the ordinances of the City of Kirkwood pertaining to Tree Maintenance permits and the proposed work and hereby agree to comply with all provisions of the ordinances of the City of Kirkwood. The maintenance will be performed in accordance with the information on this permit application, the Tree Manual, and all city codes; and further I recognize the City's authority to issue a stop work order and revoke permits if I fail to perform in accordance with city codes and this application.

Owners/Applicant Signature: _____ Date:_____

Site Approved by: _____ **Date:** _____ **Issue Approved by:** _____ **Date:**_____

Permit Fee paid by:_____ Logged on chart □ Scanned & E-mailed □

Site inspected on_____ Work completed on (date)_____ Post work inspection by _____

Forestry Permit Application

City Forester Office 139 S. Kirkwood Rd.
Kirkwood, MO 63122 (314) 984-5907 Fax (314) 822-5898

Where Community and Spirit Meet

Tree Removal Applications shall include:

____ Application for Tree Removal

____ Copy of Arboricultural Contractors License

____ Copy of Certified Arborist Credentials

____ Maintenance plan – including the following:

- □ Indicate the trees to be Removed
- □ Indicate purpose of Removal
- □ Indicate proposed date of Removal

____ Copy of approved locates from all utilities (for stump removal):

- □ MO1call verification

Tree Maintenance Applications shall include:

____ Application for Tree Maintenance

____ Copy of Arboricultural Contractors License

____ Copy of Certified Arborist Credentials

____ Maintenance plan – including the following:

- □ Indicate the trees to be affected
- □ Indicate purpose of maintenance
- □ Indicate type of maintenance

____ Copy of Pesticide Applicators License (If applicable):

____ Copy of Material Data Sheets of chemicals being used (if applicable):

Tree Planting Applications shall include:

____ Application for Tree Planting

____ Copy of Arboricultural Contractors License

____ Copy of Certified Arborist Credentials

____ Planting plan – including the following:

- □ Indicate location of planting
- □ Indicate species of tree
- □ Indicate after planting care

____ Copy of approved locates from all utilities:

- □ MO1call verification

Informational Sign
Minimum Standards

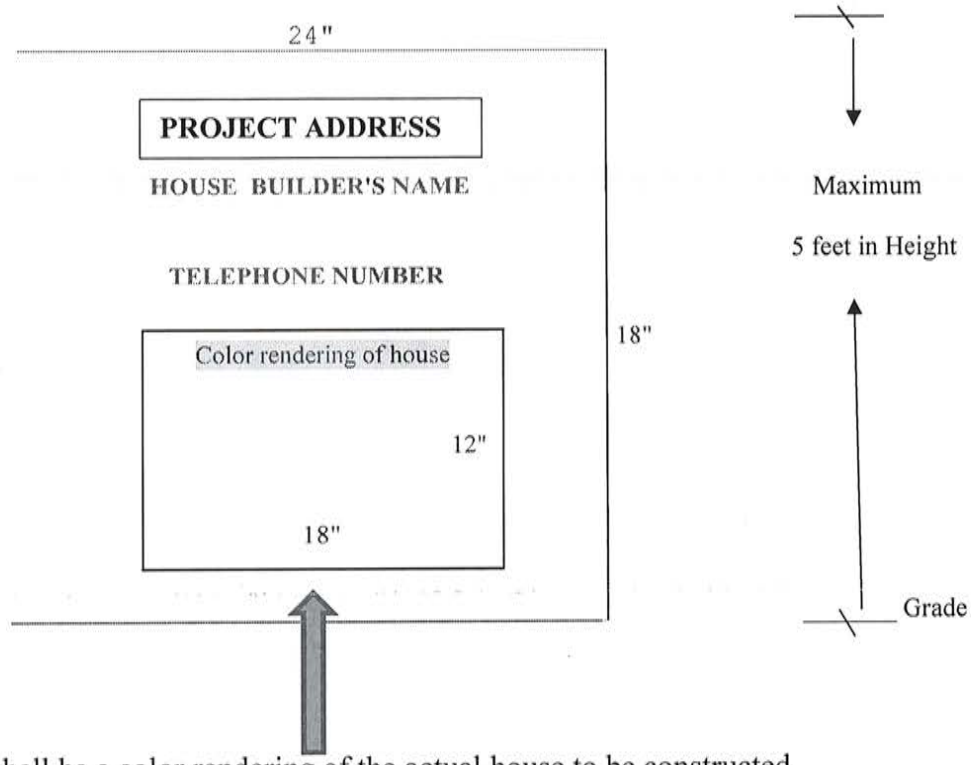

The picture shall be a color rendering of the actual house to be constructed

Attention: After demolition is complete and prior to the issuance of the building permit, this required sign shall be installed.